C.I.P.	204 Ruger Country of Origin: US	TAB. I Date 06-05-16 Revision

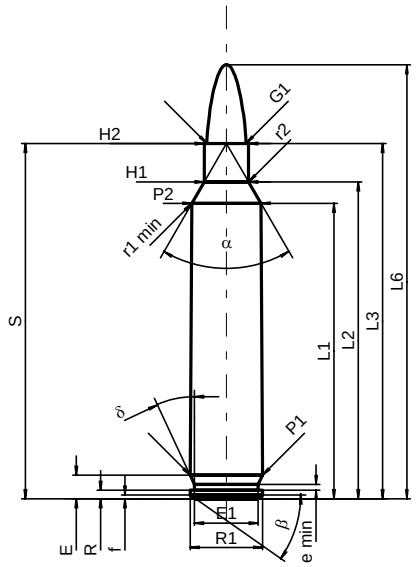

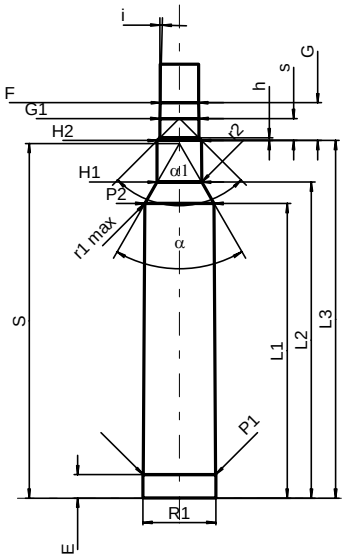

Scale 1:1

CARTRIDGE MAXI

Lengths

L1 1)	=	39.08	-0.20
L2 1)	=	41.91	-0.20
L3 1)	=	46.99	
L4	=		
L5	=		
L6	=	57.40	

Case Head

R	=	1.14
R1	=	9.60
R3	=	
E	=	3.11
E1	=	8.43
e min	=	0.76
δ	=	25°
f	=	0.48
β	=	35°

Powder Chamber

P1	=	9.56	
P2 1)*	=	9.14	-0.20

Junction Cone

α *	=	60°
S *	=	46.99
r1 min	=	0.64
r2	=	2.54

Collar

H1 *	=	5.87
H2 1)	=	5.87

Projectile

G1 1)*	=	5.19
G2	=	
F	=	
L3+G 1)	=	51.98

Pressures (Energies)
Method Transducer

Pmax	=	4050	bar
PK	=	4658	bar
PE	=	5063	bar
M	=	25.00	
EE	=	1940	Joule

Miscellaneous Dimensions

Fe	=	0.10
delta L	=	

CHAMBER MINI

Lengths

L1	=	38.97
L2	=	41.79
L3 1)	=	47.31

Breech

R	=	
R1	=	9.63
R2	=	
R3	=	
r	=	

Powder Chamber

E	=	3.11
P1 1)	=	9.59
P2 *	=	9.16

Junction Cone

α 1)*	=	60°
S *	=	46.92
r1 max	=	0.64
r2	=	3.18

Collar

H1 *	=	5.91
H2 1)	=	5.89

Commencement of Rifling

G1 1)*	=	5.19
G	=	4.99
α1	=	90°
h	=	0.35
s *	=	2.89
i 1)*	=	1°30'
w	=	

Barrel

F 1)*	=	5.08
Z 1)	=	5.18

Grooves

b	=	1.37	
N	=	6	
u	=	305.00	
Q	=	20.68	mm²

Dimensions in << mm >>
Dimensions and Tolerances for Proof Barrels
see Appendix CR 1.

Notes: 1) Check for safety reasons
* Basic dimensions

Reproduction forbidden as well as in the form of extracts without approval of C.I.P.